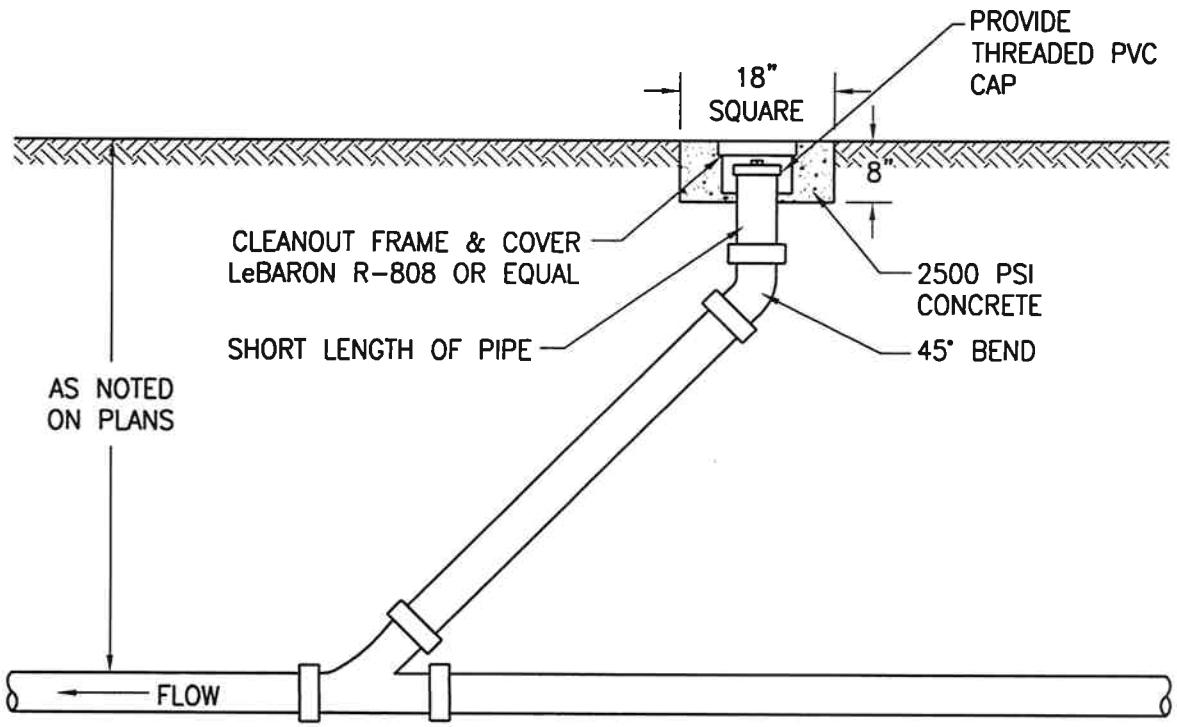

TOWN OF MILTON PUBLIC WORKS DEPARTMENT	
SCALE: NTS	DATE: FEB. 2008
DRAWING #: 34	DRAWN BY: FA&A
TYPICAL STORM AND SANITARY SEWER CLEANOUT	