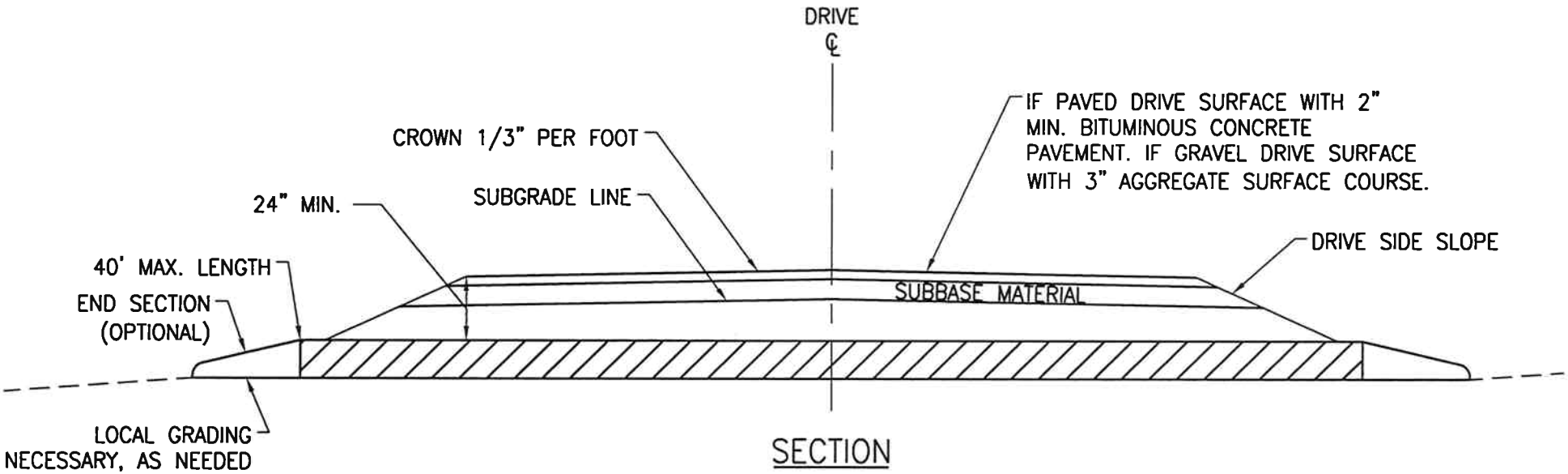

SECTION

SUBBASE MATERIAL

12" ON RESIDENTIAL DRIVES
18" ON COMMERCIAL DRIVES

DRIVE SIDE SLOPES

LOCATION	SLOPE RATE=
V > 40 MPH	6:1 OR FLATTER
URBAN AREAS OR V < 40 MPH	4:1 DESIRABLE 2:1 ALLOWABLE
OUTSIDE CLEAR ZONE	2:1 OR FLATTER

TOWN OF MILTON PUBLIC WORKS DEPARTMENT	
SCALE: NTS	DATE: FEB. 2008
DRAWING #: 10	DRAWN BY: FA&A
TYPICAL CROSS-SECTION OF INTERSECTION HIGHWAY ACCESS	